ARTICLE II
WATER DISTRIBUTION SYSTEM
SECTION 205.00 - TYPICAL DETAILS

DETAIL	PLATE
5/8" Water Meter Box Detail	II-A
1" Water Meter	II-B
1-1/2" and 2" Water Meter, Typical Service Connection	II-C
Gate or Butterfly Valve and Valve Box	II-D
Blow-Off Assembly	II-E
Permanent Blow-Off Assembly	II-F
2" Air Release Valve	II-G
Fire Hydrant	II-H
Buttress for 11-1/4° Horizontal Bend	II-I
Buttress for 22-1/2° Horizontal Bend	II-J
Buttress for 45° Horizontal Bend	II-K
Buttress for 90° Horizontal Bend	II-L
Buttress for 11-1/4°, 22-1/2°, and 45° Lower Vertical Bends	II-M
Anchorage for 11-1/4°, 22-1/2°, and 45° Upper Vertical Bends	II-N
Buttresses for Tees, Plugs and Caps	II-0
Dead End Anchor	II-P
Mechanical Joint Retainer Gland	II-Q
Joint Restraint Device	II-R
Pipe Bedding and Encasement at Stream Crossings	II-S
Pavement Patching Detail	II-T

PLATE II-A

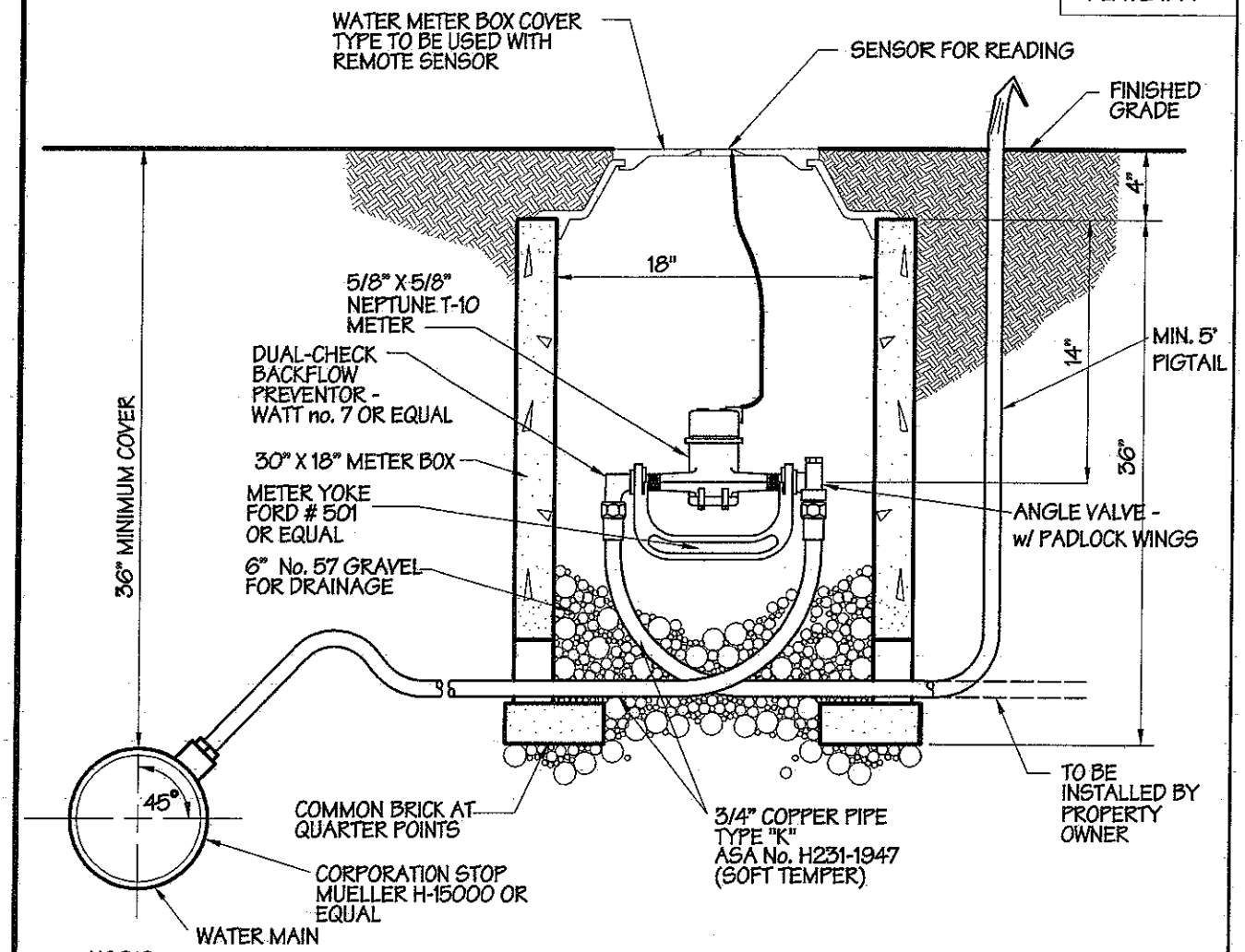

NOTES

1. ALL WATER METERS SHALL REGISTER IN GALLONS
2. 36" OF COVER SHALL BE REQUIRED ON COPPER SERVICE FROM DISTRIBUTION MAIN TO METER BOX.
3. METER BOX SHOULD BE ONE PIECE CONSTRUCTION OF CONCRETE OR RIGID FIBERGLASS (NOT ORANGEBERG).
4. ALL FITINGS SHALL BE FLARED. SOLDERED FITTINGS WILL NOT BE PERMITTED
5. SERVICE LINE LEAVING METER BOX SHALL BE STUBBED OUT WITH COPPER LINE, MIN. 5' IN LENGTH.
6. COMBINATION ANGLE VALVE AND BACKFLOW PREVENTER REQUIRED.
7. COPPER LINE FROM CORPORATION STOP TO ANGLE VALVE SHALL BE ONE CONTINUOUS LINE WITHOUT ANY COUPLINGS.
8. ALL MATERIALS TO BE FURNISHED AND INSTALLED BY CONTRACTOR EXCEPT WATER METER AND SENSOR
9. METER AND SENSOR TO BE FURNISHED BY PROPERTY OWNER AND INSTALLED BY C.O.M.P.

5/8" WATER METER BOX DETAIL

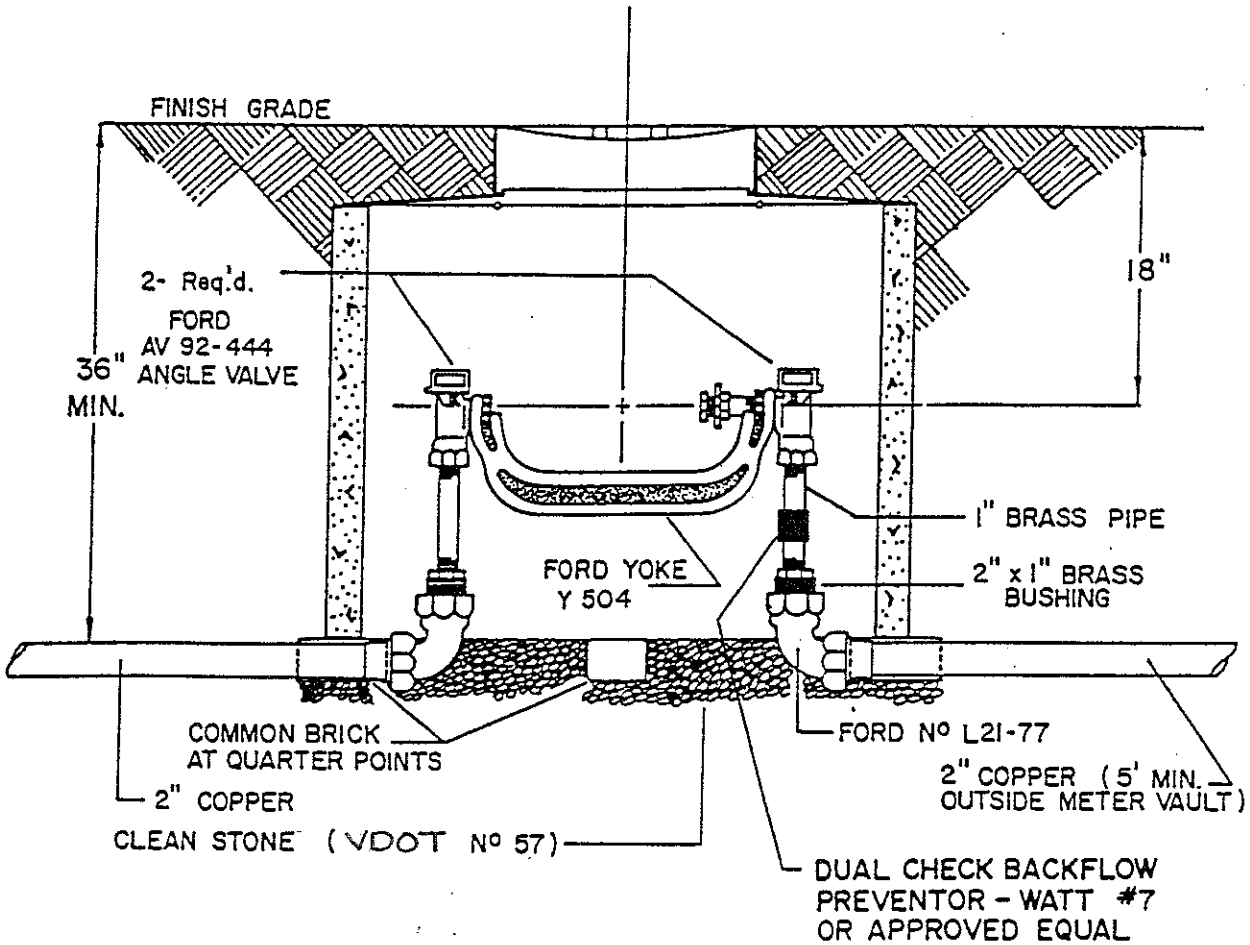

NOTES:

1. ONE PIECE BOX 24" x 30" (1" METER) MUST BE USED.
2. LID SHALL BE FORD "MONITOR" WITH PENTAGON NUT
3. INSTALLER MAY SUBSTITUTE TYPE "K" SOFT COPPER FOR BRASS SHOWN, PROVIDED APPROPRIATE FITTINGS AND VALVES ARE USED.
4. METER BOX MATERIAL: CONCRETE, PVC OR RIGID FRP.

1" WATER METER

PLATE II-C

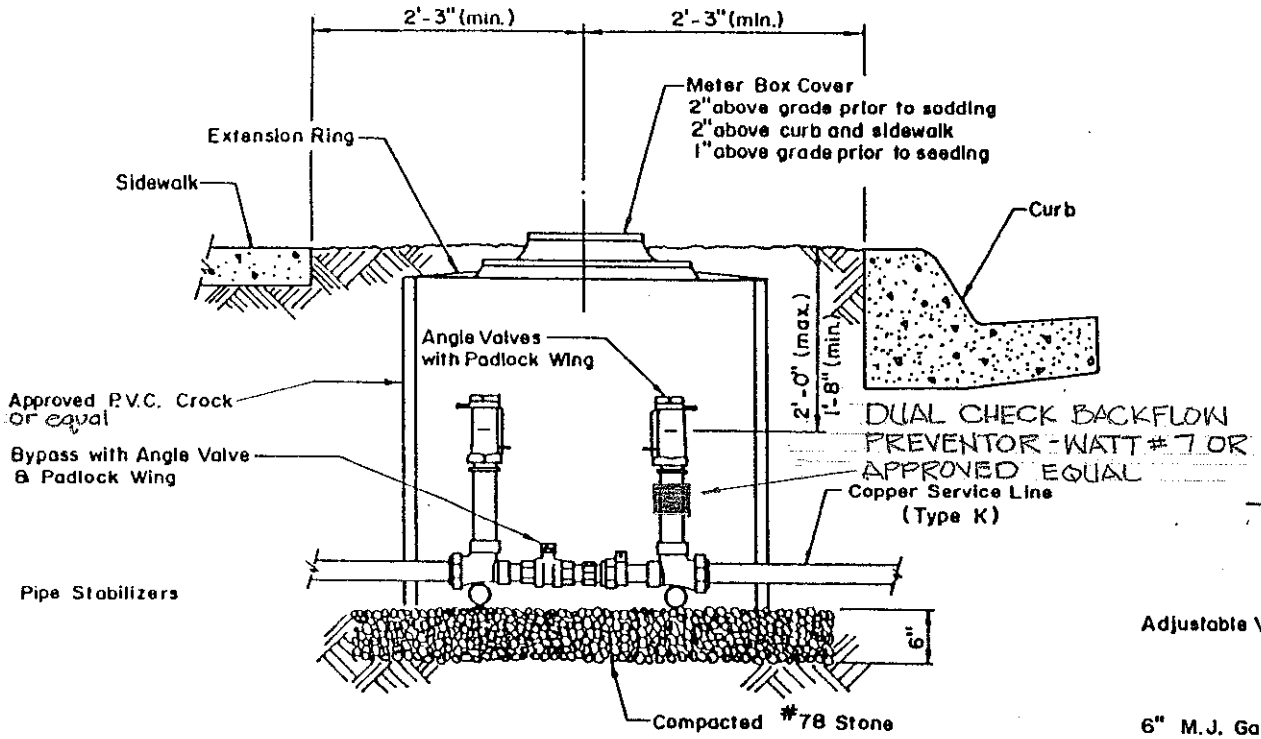

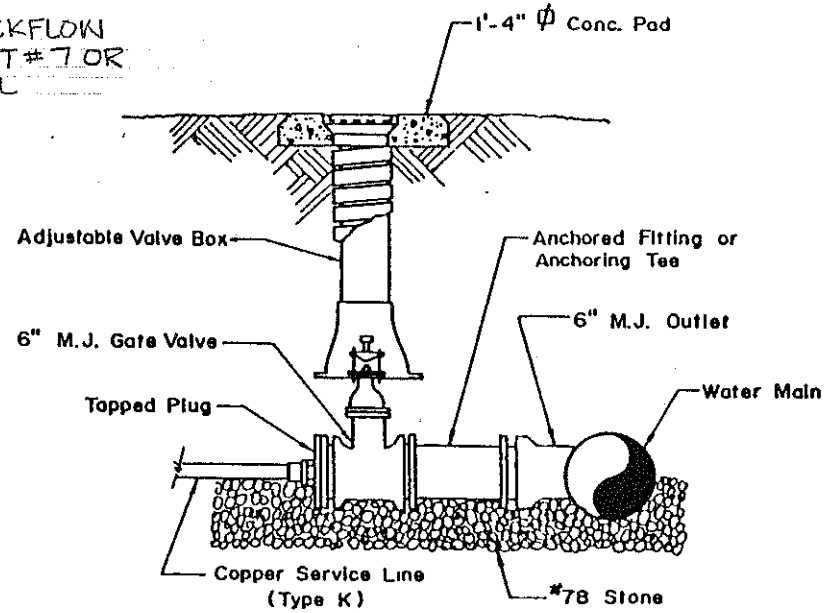

WATER METER BOX ASSEMBLY — SCHEDULE					
PIPE SIZE	METER SIZE	SETTER No.	METER BOX DIA.	METER BOX COVER No.	EXTENSION RING No.
1½"	1½"	VVF66▲	36"	C-3 or X-3▲	5▲
2"	2"	VVF77▲	36"	C-3 or X-3▲	5▲

▲ Denotes FORD METER BOX CO. part numbers.
Approved equals will be accepted

1½" AND 2" WATER METER, TYPICAL SERVICE CONNECTION

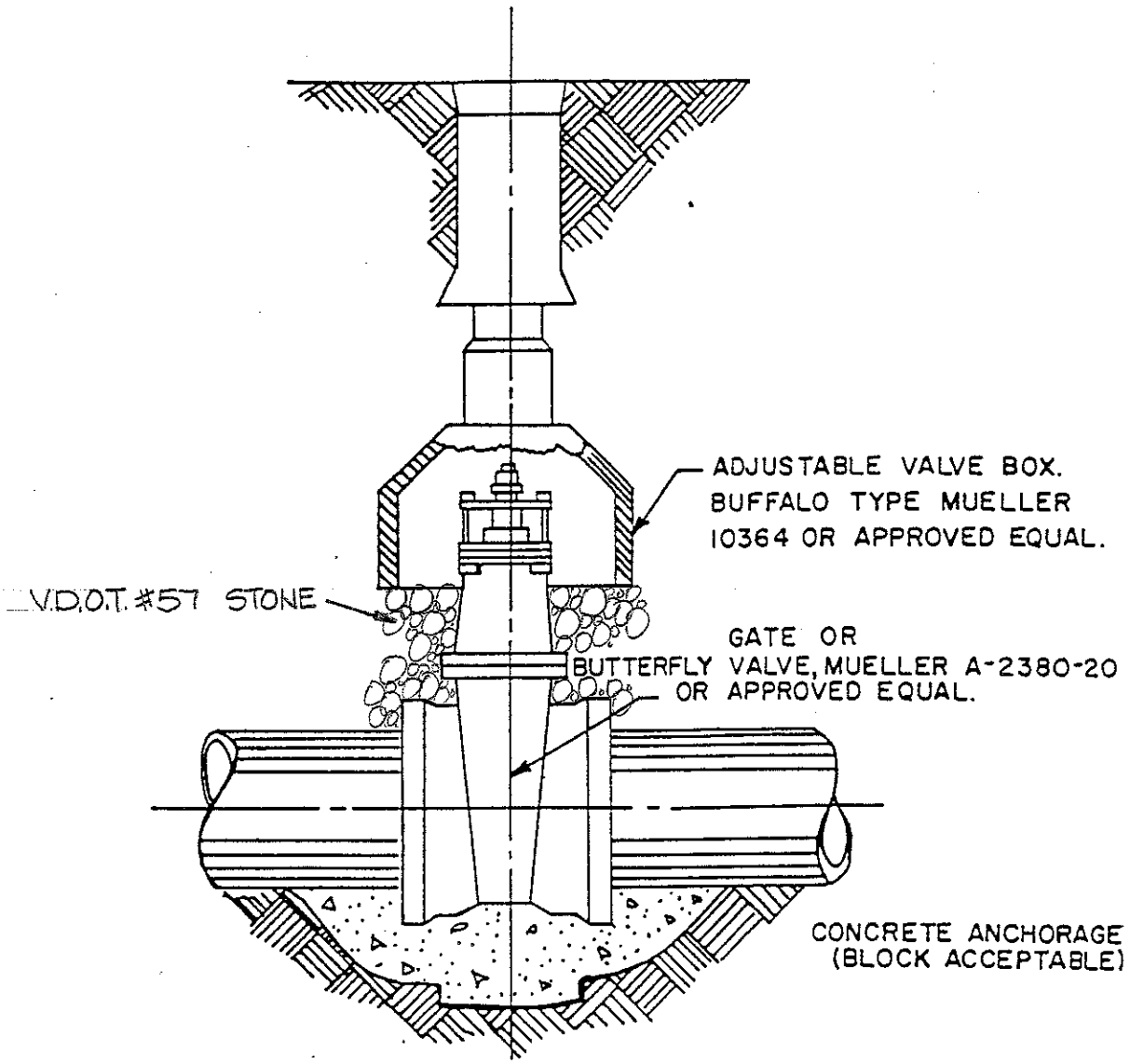

VALVE AND PIPE SHALL HAVE SAME NOMINAL DIAMETER

GATE OR BUTTERFLY VALVE AND VALVE BOX

PLATE II-E

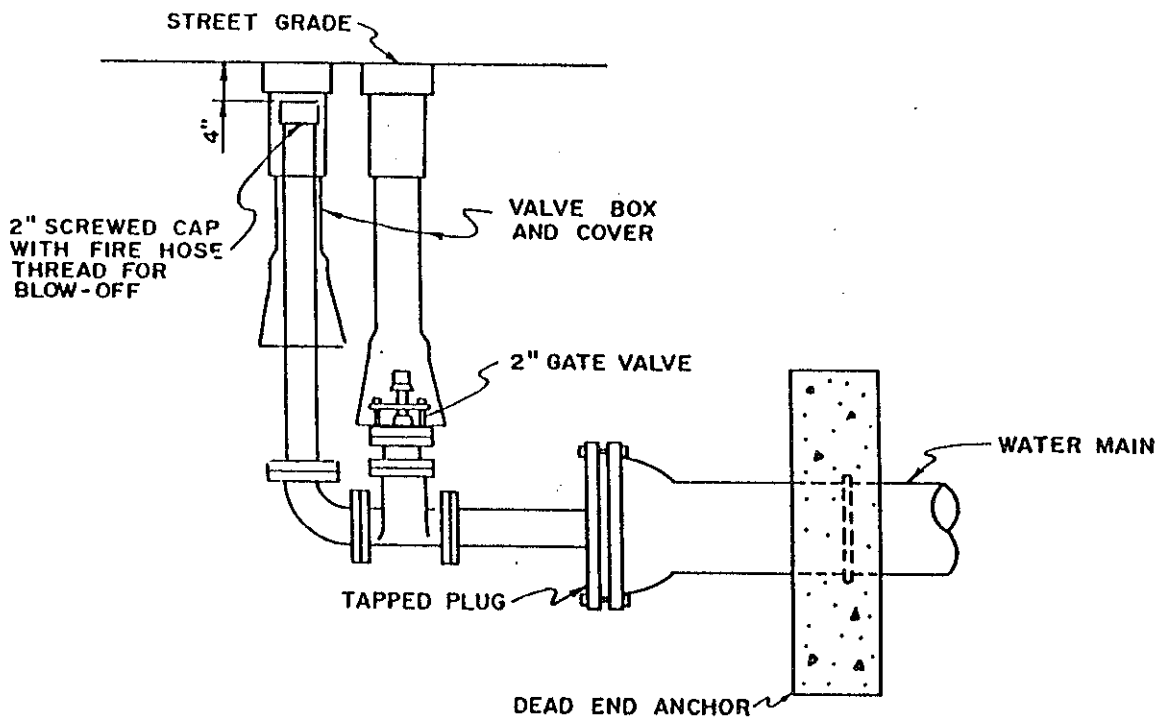

TEMPORARY BLOWOFF ASSEMBLY

PLATE II-F

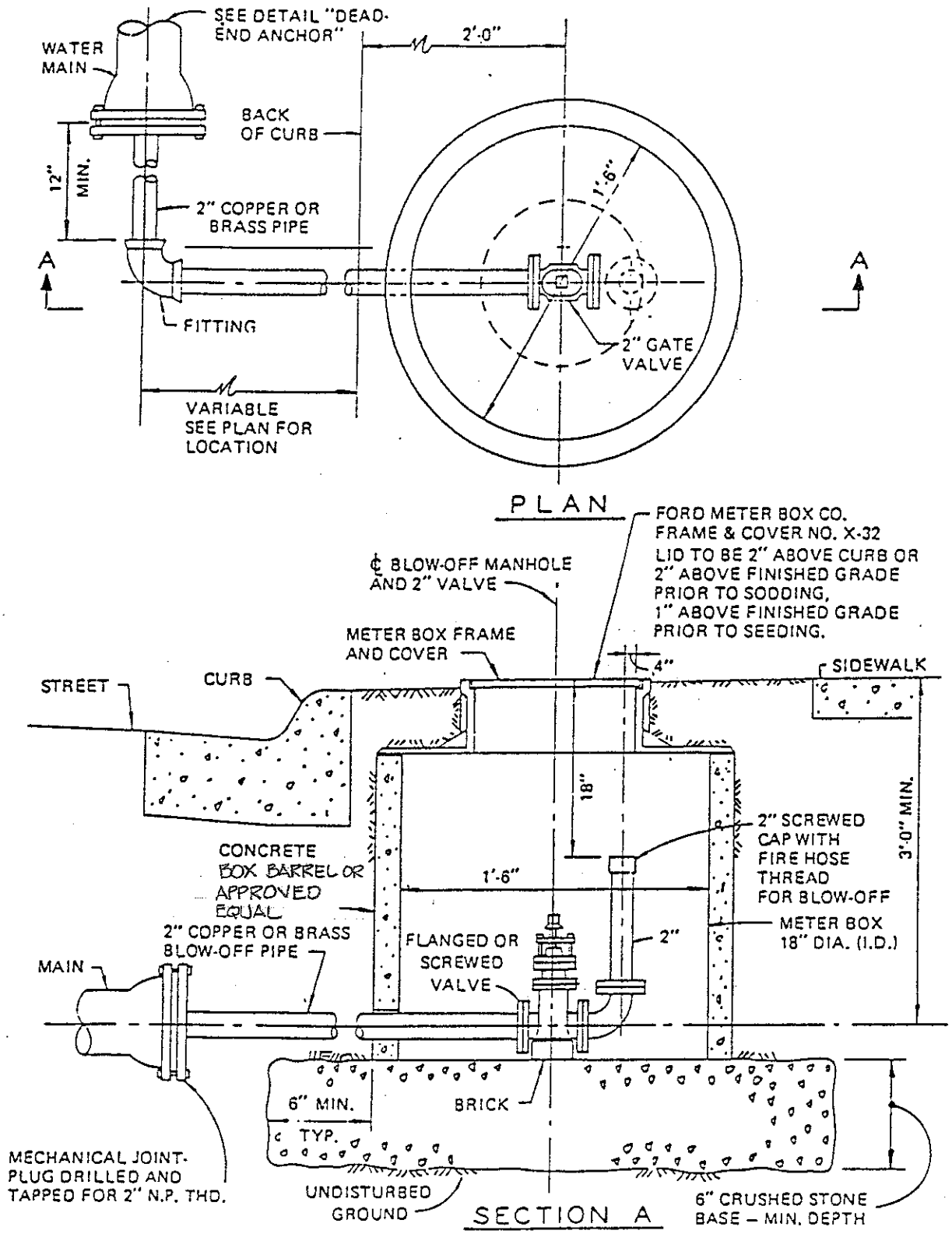

PERMANENT BLOW-OFF ASSEMBLY

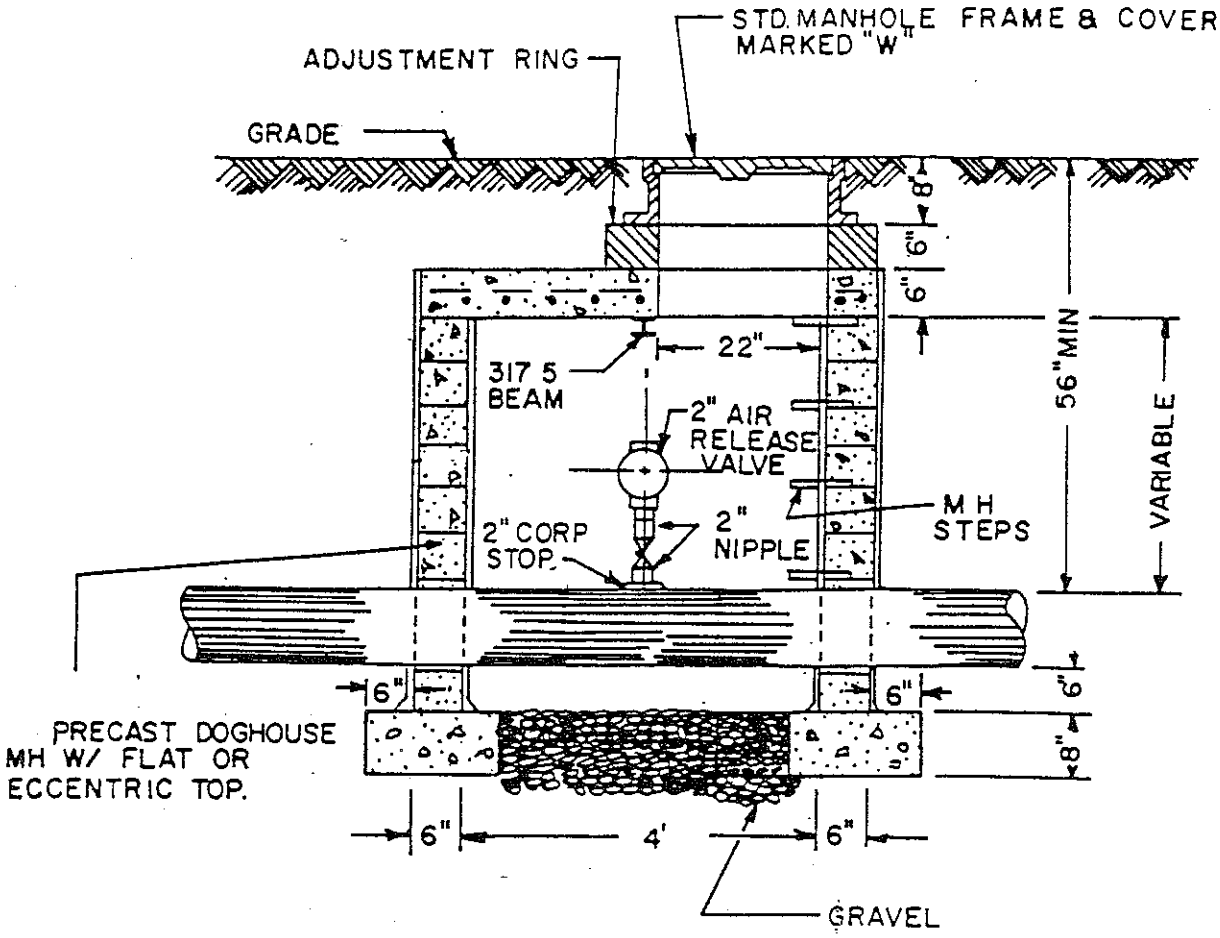

AIR RELEASE VALVE SHALL BE SIMPLEX TYPE "AV", "CRISPIN UNIVERSAL" OR APPROVED EQUAL. VALVE SHALL HAVE 2" DIAMETER SCREWED CONNECTION AND SHALL FUNCTION AT WORKING PRESSURES UP TO 150 PSI.

2" AIR RELEASE VALVE

PLATE II-H

NOTES:

1. FIRE HYDRANT MUST BE PLUMB.
2. DEAD END ANCHOR REQUIRED WHEN HYDRANT IS LOCATED AT THE END OF A DEAD END LINE.

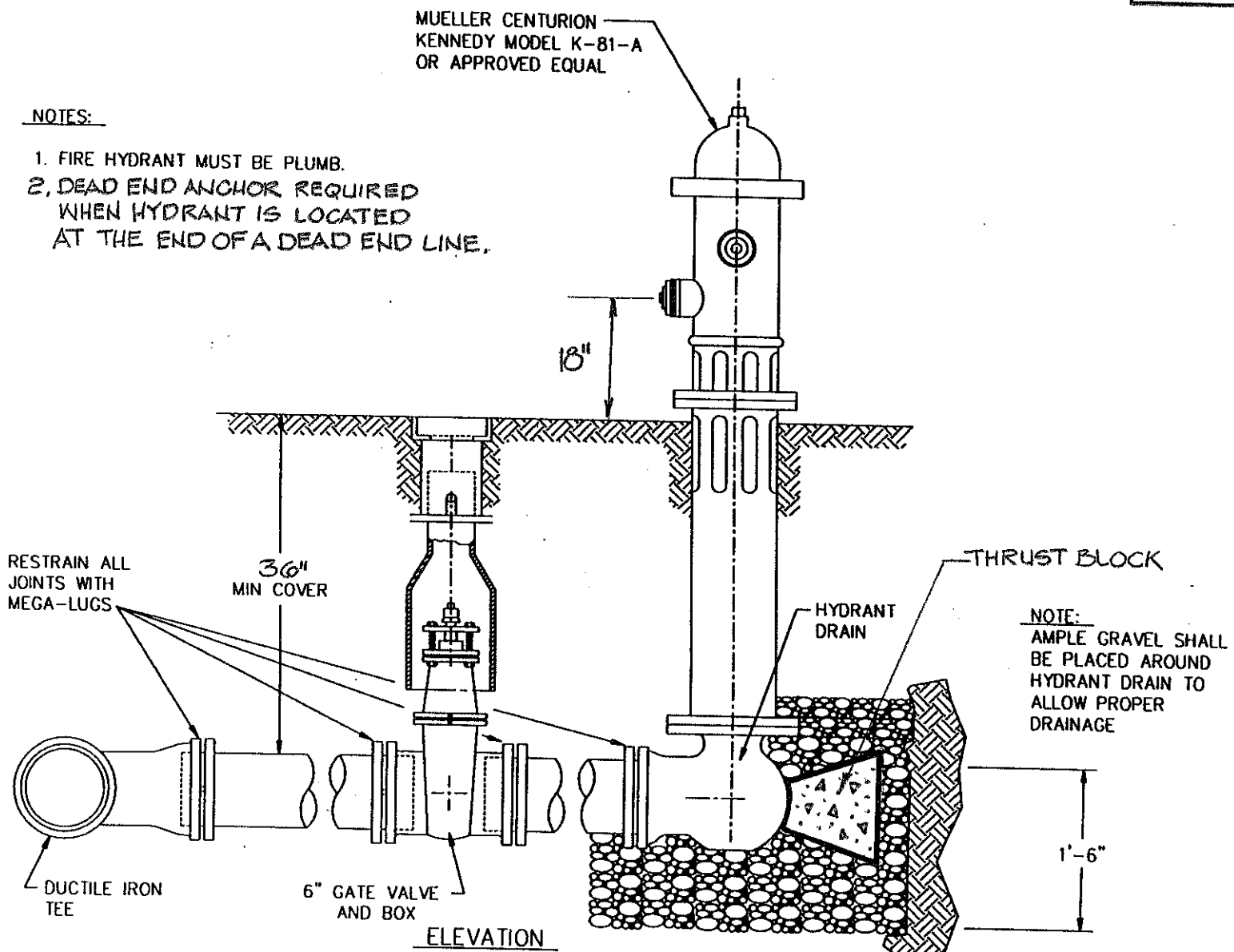

ELEVATION

FIRE HYDRANT

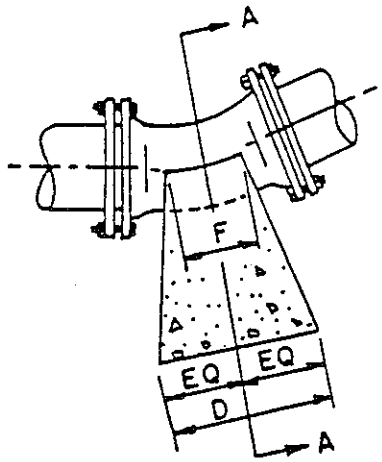

PLAN

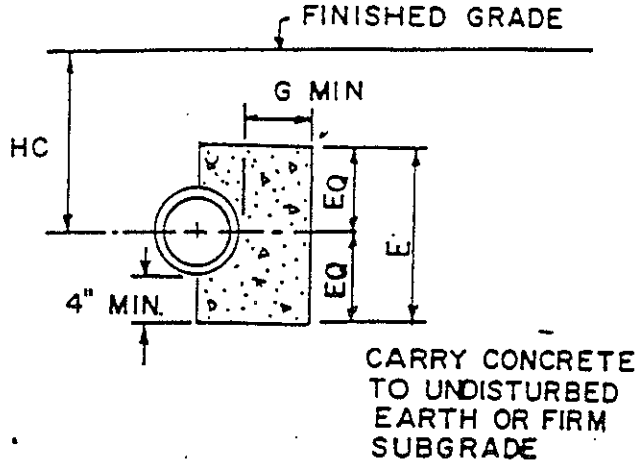

SECTION AA

SOIL PROPERTIES	SIZE	Concrete Block Dimensions At 150 PSI Pressure				Add To Dimension D For Each Add. 50 Psi. Pressure Up To 300 Psi	Adjustment For Conc. Area For Different Height HC To Be Measured From Grade To ℄ of Pipe			
		D	E	F	G		Up to 8'	8'1" to 12'	12'1" to 16'	16'1" to 20'
CS = 1000 PSF, ϕ = 15°, SOFT SILTY CLAY & BETTER	3"	4"	1'	4"	6"	2"	CONC. BLOCK AREA 1.0 x D x E	CONC. BLOCK AREA 0.875 x D x E	CONC. BLOCK AREA 0.75 x D x E	CONC. BLOCK AREA 0.625 x D x E
	4"	4"	1'	4"	6"	2"				
	6"	6"	1' 2"	6"	7"	2"				
	8"	8"	1' 4"	8"	7"	2"				
	10"	9"	1' 6"	8"	8"	4"				
	12"	1'	1' 8"	1'	9"	4"				
	16"	1' 3"	2'	1'	9"	6"				
	20"	1' 3"	2' 6"	1'	10"	6"				
	24"	1' 6"	3'	1'	1'	6"				
	30"	2'	3' 6"	1' 4"	1' 2"	9"				
CS = 0, ϕ = 15°, LOOSE SILTY SAND	3"	10"	1' 6"	6"	9"	2"	CONC. BLOCK AREA 1.0 x D x E	CONC. BLOCK AREA 0.5 x D x E	CONC. BLOCK AREA 0.375 x D x E	CONC. BLOCK AREA 0.25 x D x E
	4"	1'	2'	6"	9"	2"				
	6"	1' 6"	2'	6"	1'	2"				
	8"	2' 4"	2'	8"	1'	2"				
	10"	2' 6"	2' 3"	8"	1'	4"				
	12"	3' 4"	2' 6"	1'	1'	4"				
	16"	4' 2"	3'	1'	1' 6"	6"				
	20"	4' 6"	3' 6"	1'	1' 6"	6"				
	24"	5' 8"	4'	1' 6"	1' 6"	6"				
	30"	7'	5'	2'	1' 6"	9"				

DIMENSION D & E SHALL BE ADJUSTED FOR REQUIRED AREA.
DIMENSION F & G SHALL REMAIN SAME.
DIMENSION D SHALL BE ADJUSTED FOR REQUIRED PRESSURE IN EXCESS OF 150 PSI BEFORE MAKING ADJUSTMENT FOR HEIGHT.

BUTTRESS FOR 11¼° HORIZONTAL BEND

SOIL PROPERTIES	SIZE	CONCRETE BLOCK DIMENSIONS AT 150 PSI PRESSURE				ADD TO DIMENSION D FOR EACH ADD. 50 PSI PRESSURE UP TO 300 PSI.	Adjustment For Conc. Area For Different Height HC To Be Measured From Grade To ℄ Of Pipe			
		D	E	F	G		Up To 8' 0"	8' 1" To 12' 0"	12' 1" To 16' 0"	16' 1" To 20' 0"
CS = 1000 PSF Φ = 15° SOFT SILTY CLAY OR BETTER	3"	6"	1' 0"	6"	7"	2"	CONC. BLOCK AREA = 1.0 x D x E	C.B.A. = 0.875 x D x E	C.B.A. = 0.75 x D x E	C.B.A. = 0.625 x D x E
	4"	6"	1' 0"	6"	7"	2"				
	6"	8"	1' 2"	6"	8"	2"				
	8"	1' 0"	1' 4"	8"	8"	4"				
	10"	1' 3"	1' 6"	8"	10"	4"				
	12"	1' 6"	1' 8"	1' 0"	1' 0"	6"				
	16"	2' 0"	2' 0"	1' 0"	1' 3"	6"				
	20"	2' 6"	2' 6"	1' 0"	1' 6"	9"				
	24"	3' 0"	3' 0"	1' 0"	1' 6"	9"				
	30"	4' 0"	3' 6"	1' 4"	1' 9"	1' 0"				
CS = 0 Φ = 15° LOOSE SILTY SAND	3"	1' 0"	1' 6"	6"	9"	2"	CONC. BLOCK AREA = 1.0 x D x E	C.B.A. = 0.5 x D x E	C.B.A. = 0.375 x D x E	C.B.A. = 0.25 x D x E
	4"	1' 6"	2' 0"	6"	9"	2"				
	6"	2' 0"	2' 0"	6"	1' 0"	2"				
	8"	3' 4"	2' 0"	8"	1' 0"	4"				
	10"	4' 2"	2' 3"	8"	1' 0"	4"				
	12"	4' 8"	2' 9"	1' 0"	1' 6"	6"				
	16"	5' 9"	3' 6"	1' 0"	1' 6"	6"				
	20"	7' 10"	4' 0"	1' 0"	2' 0"	9"				
	24"	9' 10"	5' 0"	1' 6"	2' 0"	9"				
	30"	11' 8"	6' 0"	2' 0"	2' 0"	1' 0"				

DIMENSION D&E SHALL BE ADJUSTED FOR REQUIRED AREA.
DIMENSION F&G SHALL REMAIN SAME.
DIMENSION D SHALL BE ADJUSTED FOR REQUIRED PRESSURE IN EXCESS OF 150 PSI BEFORE MAKING ADJUSTMENT FOR HEIGHT.

NOTES

1. FC = 3000 PSI AT 28 DAYS.
2. CS = SOIL COHESION IN PSF AND Φ = ANGLE OF INTERNAL FRICTION.
3. CARRY ALL BEARING SURFACES TO UNDISTURBED GROUND OR FIRM SUBGRADE.

BUTTRESS FOR 22½° HORIZONTAL BEND

SOIL PROPERTIES	SIZE	Concrete Block Dimensions At 150 PSI Pressure				Add To Dimension D For Each Add 50 PSI Pressure Up To 300PSI	Adjustment For Conc. Area For Different Height HC To Be Measured From Grade To ℄ Of Pipe			
		D	E	F	G		Up To 8'	8' 1" To 12'	12' 1" To 16'	16' 1" To 20'
CS=1000 PSF ϕ=15° SOFT SILTY CLAY OR BETTER	3"	9"	1' 0"	6"	6"	4"	CONC. BLOCK AREA 1.0 x D x E	CBA 0.875 x D x E	CBA 0.75 x D x E	CBA 0.625 x D x E
	4"	9"	1' 0"	6"	6"	4"				
	6"	1' 0"	1' 2"	6"	8"	4"				
	8"	1' 6"	1' 4"	8"	9"	6"				
	10"	2' 0"	1' 6"	8"	10"	6"				
	12"	2' 6"	1' 8"	1' 0"	1' 0"	9"				
	16"	3' 6"	2' 6"	1' 0"	1' 3"	9"				
	20"	4' 8"	2' 6"	1' 0"	1' 4"	1' 4"				
	24"	5' 0"	3' 0"	1' 0"	1' 9"	2' 0"				
	30"	6' 0"	4' 0"	1' 4"	2' 3"	2' 0"				
CS=0 ϕ=15° LOOSE SILTY SAND	3"	1' 6"	1' 6"	6"	1' 0"	4"	CONC. BLOCK AREA 1.0 x D x E	CBA 0.5 x D x E	CBA 0.375 x D x E	CBA 0.25 x D x E
	4"	2' 0"	2' 0"	6"	1' 0"	4"				
	6"	3' 0"	2' 0"	6"	1' 0"	4"				
	8"	4' 0"	2' 6"	8"	1' 0"	6"				
	10"	6' 0"	2' 6"	8"	1' 0"	6"				
	12"	7' 0"	3' 0"	1' 0"	1' 6"	9"				
	16"	11' 0"	4' 0"	1' 0"	1' 6"	9"				
	20"	11' 8"	5' 0"	1' 0"	2' 0"	1' 4"				
	24"	12' 6"	6' 0"	1' 6"	2' 0"	2' 0"				
	30"	20' 0"	6' 0"	2' 0"	2' 6"	2' 0"				

DIMENSION D & E SHALL BE ADJUSTED FOR REQUIRED AREA.
DIMENSION F & G SHALL REMAIN SAME.
DIMENSION D SHALL BE ADJUSTED FOR REQUIRED PRESSURE IN EXCESS OF 150 PSI BEFORE MAKING ADJUSTMENT FOR HEIGHT.

BUTTRESS FOR 45° HORIZONTAL BEND

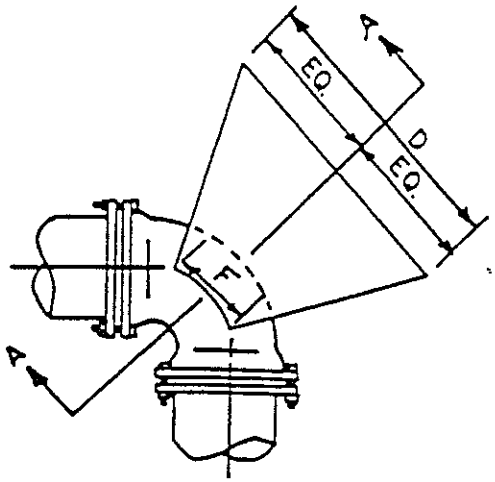

PLAN

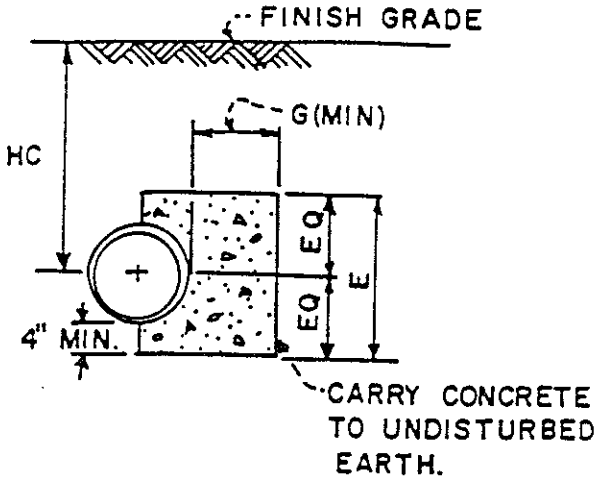

SECTION AA

Soil Properties	SIZE	Concrete Block Dimensions At 150 PSI Pressure				Add To Dimension D For Each Addnl. 50 PSI Pressure Up To 300 PSI	Adjustment For Conc. Area For Different Height (HC) To Be Measured From Grade To ℄ of Pipe			
		D	E	F	G		Up To 8'0"	8'1" To 12'	12'1" To 16'	16'1" To 20'
CS=1000 PSF Φ=15° SOFT SILTY CLAY OR BETTER	3"	1'0"	1'0"	6"	1'0"	6"	CONC. BLOCK AREA 1.0 x D x E	C.B.A. 0.875 x D x E	C.B.A. 0.75 x D x E	C.B.A. 0.625 x D x E
	4"	1'4"	1'0"	6"	1'0"	6"				
	6"	1'9"	1'2"	6"	1'6"	6"				
	8"	2'6"	1'4"	8"	1'6"	9"				
	10"	3'0"	2'0"	1'0"	1'6"	9"				
	12"	4'0"	2'0"	1'0"	1'6"	1'0"				
	16"	5'0"	2'6"	1'4"	1'9"	1'0"				
	20"	6'0"	3'4"	1'8"	1'9"	2'0"				
	24"	7'3"	4'0"	2'0"	2'0"	2'6"				
	30"	9'0"	5'0"	2'6"	2'0"	3'0"				
CS=0 Φ=15° LOOSE SILTY SAND	3"	2'6"	2'0"	8"	1'0"	6"	CONC. BLOCK AREA 1.0 x D x E	C.B.A. 0.5 x D x E	C.B.A. 0.375 x D x E	C.B.A. 0.25 x D x E
	4"	3'4"	2'0"	8"	1'0"	6"				
	6"	5'2"	2'0"	1'0"	1'8"	6"				
	8"	6'8"	2'6"	1'0"	1'6"	9"				
	10"	10'0"	3'0"	1'6"	1'6"	9"				
	12"	10'0"	4'0"	1'6	2'0	1'0"				
	16"	12'6"	5'0"	2'0"	2'0"	1'0"				
	20"	15'10"	6'0"	2'0"	2'0"	2'0"				
	24"									
	30"									

DIMENSION D&E SHALL BE ADJUSTED FOR REQUIRED AREA.
DIMENSION F&G SHALL REMAIN SAME.
DIMENSION D SHALL BE ADJUSTED FOR REQUIRED PRESSURE IN EXCESS OF 150 PSI BEFORE MAKING ADJUSTMENT FOR HEIGHT.
SPECIAL DESIGN REQUIRED.

BUTTRESS FOR 90° HORIZONTAL BEND

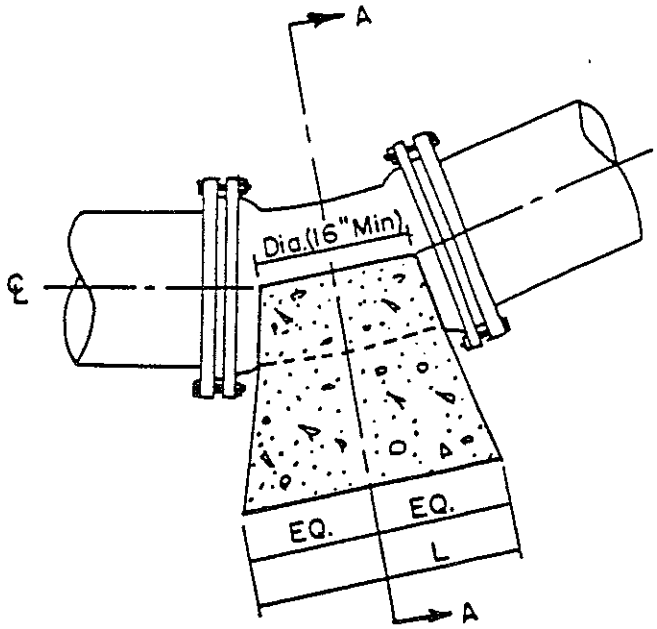

ELEVATION

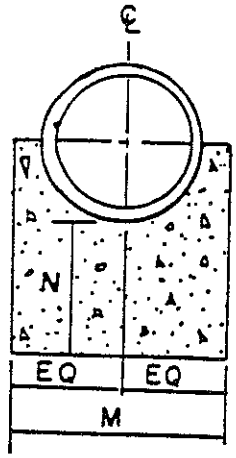

SECTION

BUTTRESS FOR LOWER VERTICLE BENDS											
BEND		SIZE									
		3"	4"	6"	8"	10"	12"	16"	20"	24"	30"
11 1/4°	L	6"	6"	6"	8"	8"	8"	1'1"	1'5"	1'10"	2'8"
	M	1'0"	1'0"	1'2"	1'4"	1'6"	2'0"	2'4"	2'8"	3'0"	3'4"
	N	8"	8"	8"	8"	8"	8"	9"	10"	12"	1'2"
22 1/2°	L	6"	6"	10"	11"	1'3"	1'4"	2'1"	2'9"	3'7"	3'3"
	M	1'0"	1'0"	1'2"	1'4"	1'6"	2'0"	2'4"	2'8"	3'0"	3'2"
	N	8"	8"	8"	8"	9"	9"	12"	1'2"	1'4"	1'6"
45°	L	10"	1'0"	1'2"	1'9"	2'5"	2'8"	4'0"	5'6"	6'0"	8'2"
	M	1'0"	1'0"	1'2"	1'4"	1'6"	2'0"	2'4"	2'8"	3'6"	4'0"
	N	8"	8"	8"	8"	12"	1'2"	1'6"	2'0"	2'6"	3'0"

NOTES: 1. Fc = 3000 PSI AT 28 DAYS.

2. CARRY ALL BEARING SURFACES TO UNDISTURBED EARTH OR FIRM SUBGRADE.

3. THE BUTTRESS DIMENSIONS ARE BASED ON THE WATER PRESSURE OF 150 PSI. AND SOIL BEARING PRESSURE OF 2500 PSI. WHERE THE WATER PRESSURE AND SOIL BEARING PRESSURE IS DIFFERENT, THE AREA OF CONCRETE BLOCK (I.E. L&M) SHALL BE PROPORTIONED ACCORDINGLY. AREA ADJUSTMENT FOR REQUIRED PRESSURE SHALL BE MADE FIRST BEFORE MAKING ADJUSTMENT FOR SOIL BEARING PRESSURE.

BUTTRESS FOR 11¼°, 22½°, AND 45° LOWER VERTICAL BENDS

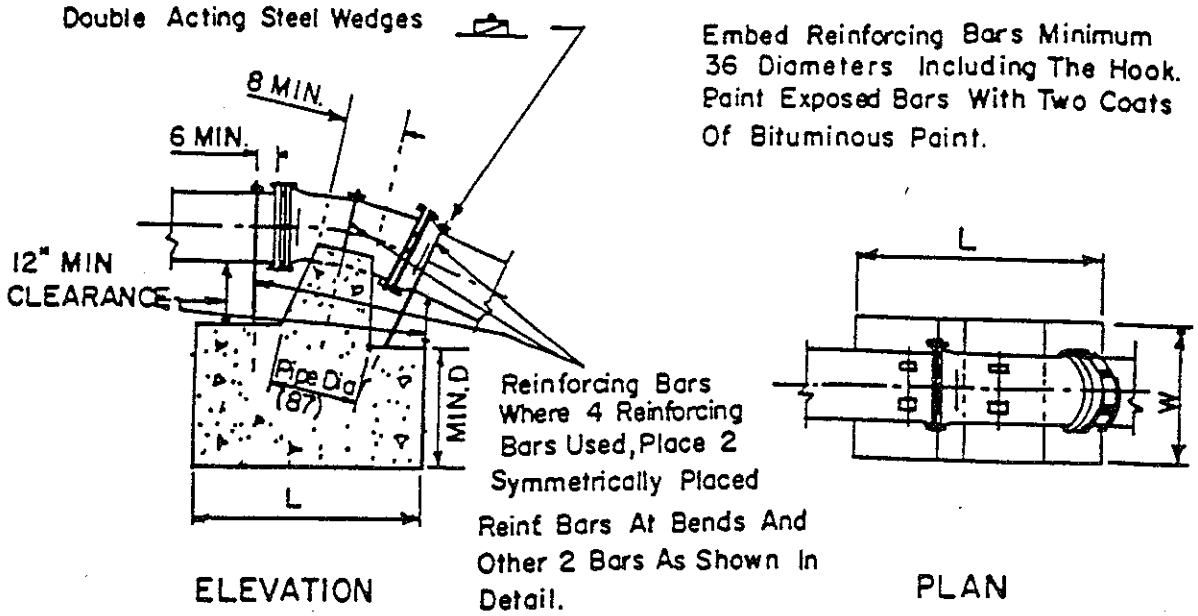

BEND		SIZE									
		3"	4"	6"	8"	10"	12"	16"	20"	24"	30"
11 1/4°	L	1'6"	1'6"	2'0"	2'0"	2'3"	2'6"	3'3"	4'0"	4'6"	5'0"
	W	1'6"	1'6"	2'0"	2'0"	2'3"	2'6"	3'3"	4'0"	4'6"	5'0"
	D	1'6"	1'6"	1'6"	2'0"	2'0"	2'3"	2'6"	2'6"	3'0"	3'0"
	Reinf. Bars No. & Size	3#5	3#5	3#5	3#6	3#6	3#6	3#6	3#8	3#8	3#8
22 1/2°	L	1'6"	2'0"	2'6"	2'9"	3'6"	4'0"	4'6"	5'6"	6'0"	7'0"
	W	1'6"	2'0"	2'6"	2'9"	3'6"	4'0"	4'6"	5'6"	6'0"	7'0"
	D	1'6"	1'6"	2'0"	2'3"	2'3"	2'6"	3'0"	3'6"	4'0"	4'6"
	Reinf. Bars No. & Size	3#5	3#5	3#5	3#6	3#6	4#6	4#6	3#8	4#8	4#8
45°	L	2'0"	2'6"	3'0"	3'6"	4'0"	4'6"	6'0"	7'6"	8'6"	10'0"
	W	2'0"	2'6"	3'0"	3'6"	4'0"	4'6"	6'0"	7'6"	8'6"	10'0"
	D	1'6"	2'0"	2'0"	2'6"	2'9"	3'0"	3'6"	4'0"	4'6"	5'0"
	Reinf. Bars No. & Size	3#5	3#5	3#5	3#6	4#6	4#6	4#8	4#8	4#8	4#9

NOTES: 1. Fc = 3000 PSI AT 28 DAYS.
2. Carry All Bearing Surfaces To Undisturbed Earth Or Firm Subgrade.
3. The Anchorage Dimension Are Based On The Water Pressure Of 150 PSI. Where The Pressure Is Different, The Volume Of Concrete (I.E, L x W x D) Shall Be Proportioned To Required Pressure.

ANCHORAGE FOR 11¼°, 22½°, AND 45° UPPER VERTICAL BENDS

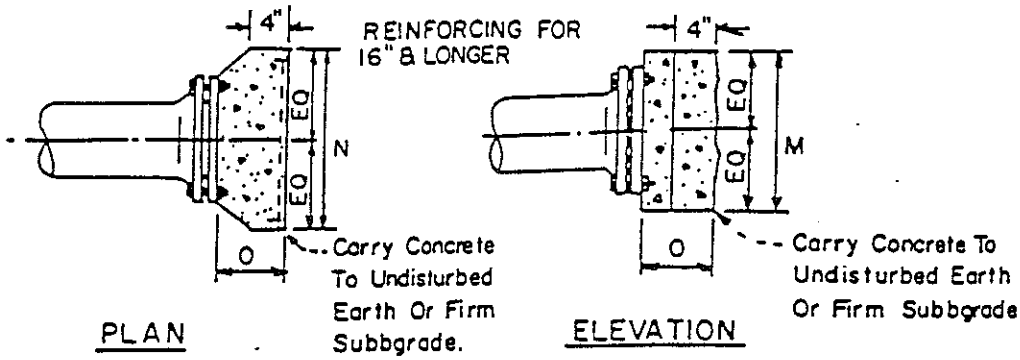

BUTTRESS FOR PLUGS & CAPS										
	SIZE									
	3"	4"	6"	8"	10"	12"	16"	20"	24"	30"
M	*	*	*	2'6"	2'8"	3'6"	4'8"	6'0"	6'8"	8'0"
N	*	*	*	1'6"	2'2"	2'6"	3'4"	4'0"	5'0"	6'8"
O	*	*	*	10"	1'0"	1'2"	1'4"	1'6"	1'8"	2'0"
							REINFORCE WITH 66" EW			

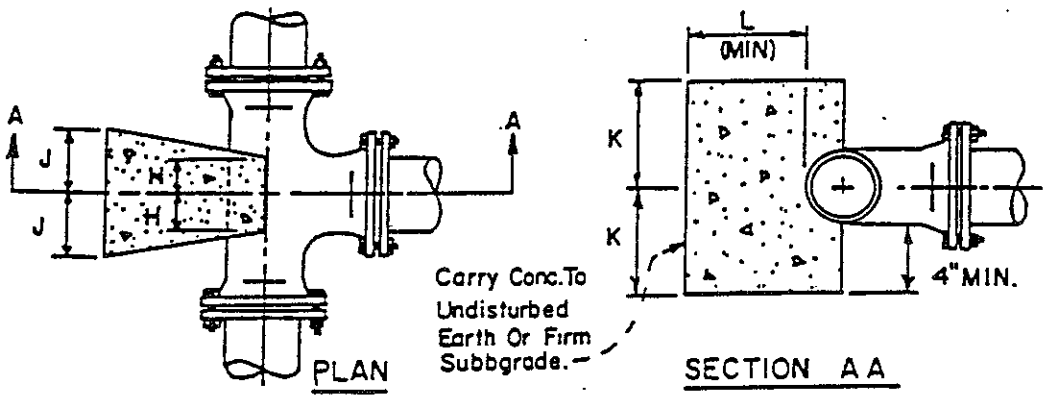

BUTTRESS FOR TEES										
	SIZE OF BRANCH									
	3"	4"	6"	8"	10"	12"	16"	20"	24"	30"
J	6"	6"	8"	9"	1'1"	1'3"	1'8"	2'0"	2'6"	3'4"
K	6"	8"	10"	1'3"	1'4"	1'9"	2'4"	3'0"	3'4"	4'0"
L	6"	6"	8"	9"	10"	12"	1'2"	1'6"	1'8"	2'0"
H	4"	4"	6"	6"	6"	6"	8"	1'0"	1'0"	1'0"

AREA OF BLOCK = 2J x 2K

NOTE TAPPING ASSEMBLIES & SLEEVES TO BE CONCRETE BLOCKED AS COMPARABLE SIZED TEES

NOTES

1. Fc = 3000 PSI AT 28 DAYS.
2. THE BUTTRESS DIMENSIONS ARE BASED ON THE WATER PRESSURE OF 150 PSI WHERE THE PRESSURE IS DIFFERENT, THE AREA OF BLOCK SHALL BE PROPORTIONED TO REQUIRED PRESSURE
3. CARRY ALL BEARING SURFACES To UNDISTURBED GROUND OR FIRM SUBBGRADE

BUTTRESSES FOR TEES, PLUGS, AND CAPS

NOTE:
BEARING AREA IS BASED ON 200 PSI TEST PRESSURE AND A SOIL BEARING PRESSURE OF 2,000 POUNDS PER SQUARE FOOT. INCREASE BLOCK DIMENSIONS AS REQUIRED IN SOILS WITH LOWER BEARING VALVES.

DEAD END ANCHOR SCHEDULE				
LINE SIZE	A	B	C	D
6"	2'-0"	1'-0"	1'-6"	1'-0"
8"	2'-0"	1'-3"	1'-6"	1'-0"
10"	2'-3"	1'-6"	1'-6"	1'-6"
12"	2'-6"	2'-0"	1'-6"	1'-6"

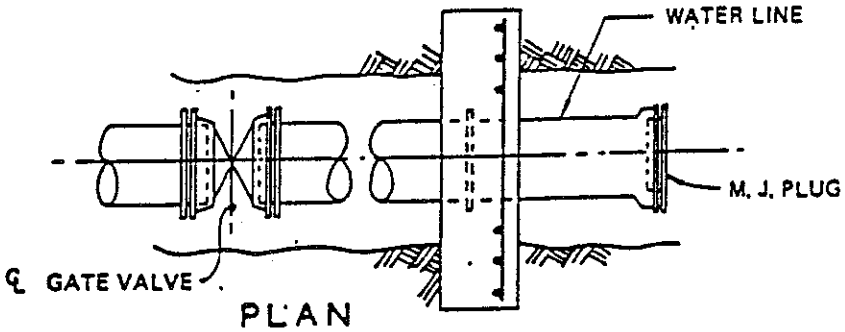

PLAN

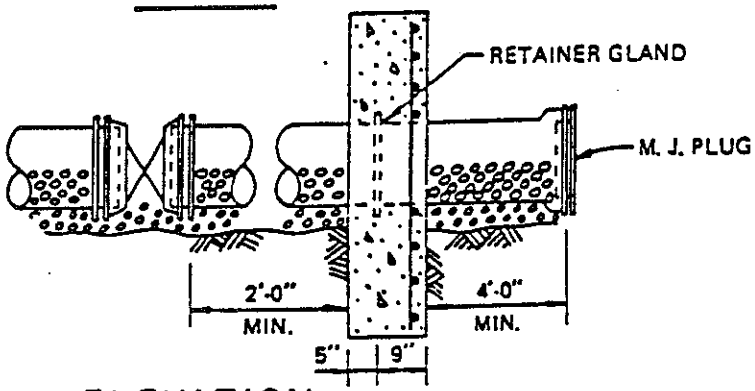

ELEVATION

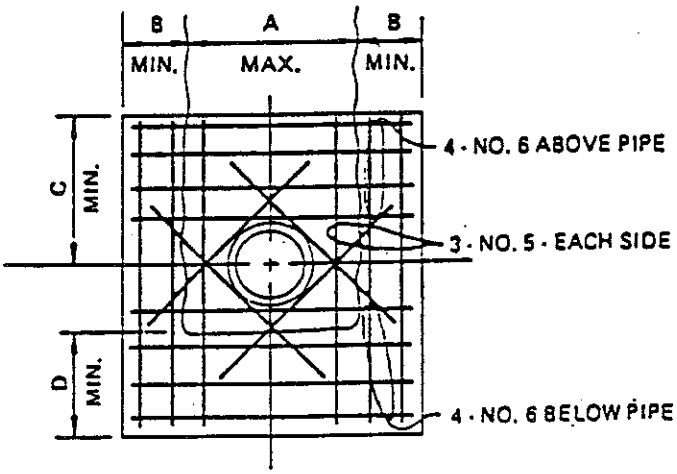

SECTION

DEAD END ANCHOR

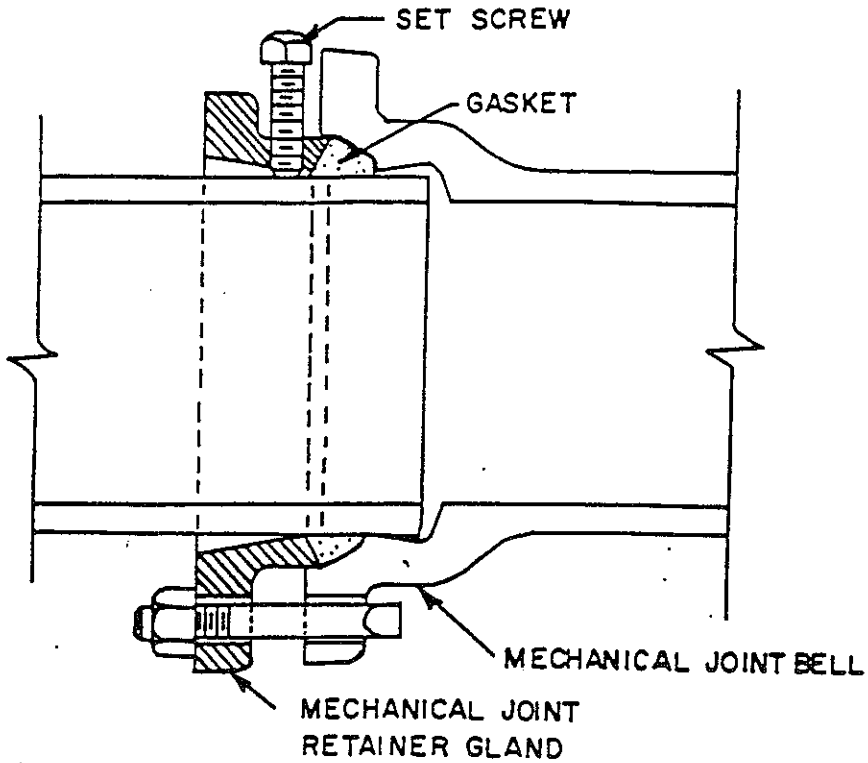

SIZE (INCHES)	NO. OF SET SCREWS	PRESSURE RATING IN PSI.
3	4	300 PSI.
4	4	300
6	6	300
8	9	200
10	16	200
12	16	200
16	24	200
20	28	200
24	32	150
30	40	150

NOTES:

1. All Set Screws Are 5/8" Size With Hardened Cupped Ends And 5/8" Square Heads.
2. Sizes 16" Through 30" Are For Installation On Ductile Iron Pipe Only.
3. Tighten Set Screws Evenly To 80 Ft. Pounds On 3"-12" Glands And 65 Ft. Pounds On 16"-30" Glands.

MECHANICAL JOINT RETAINER GLAND

PLATE II-R

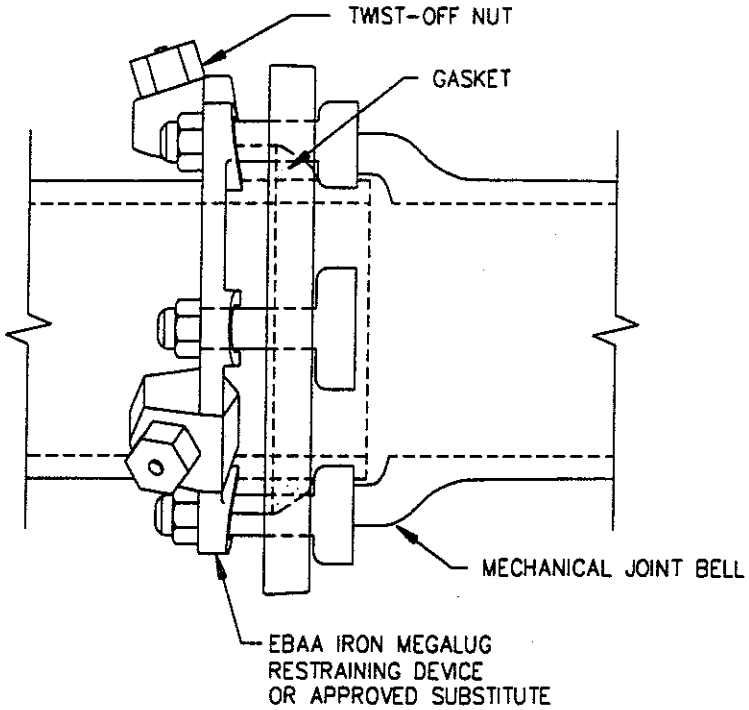

NOMINAL PIPE SIZE (INCHES)	NUMBER OF TWIST-OFF NUTS	NUMBER OF T-BOLTS	RATED PRESSURE
3	2	4	350 PSI
4	2	4	350 PSI
6	3	6	350 PSI
8	4	6	350 PSI
10	6	8	350 PSI
12	8	8	350 PSI
16	12	12	350 PSI
18	12	12	250 PSI
24	16	16	250 PSI
30	20	20	250 PSI
36	24	24	250 PSI
42	28	28	250 PSI

NOTES:

1. Make any joint deflection necessary before torquing the T-head bolts.
2. Tighten T-head bolts, bottom first, then top, sides and remainder.
3. Repeat Note 1. until all T-bolts are properly torqued.
4. Tighten twist-off nuts so that all wedges firmly contact pipe.
5. Tighten twist-off nuts in alternating manner,shearing off nuts.
6. MEGALUG may be reset or reused by assembly as described above and torquing wedge bolts to 90 ft-lbs.

JOINT RESTRAINT DEVICE

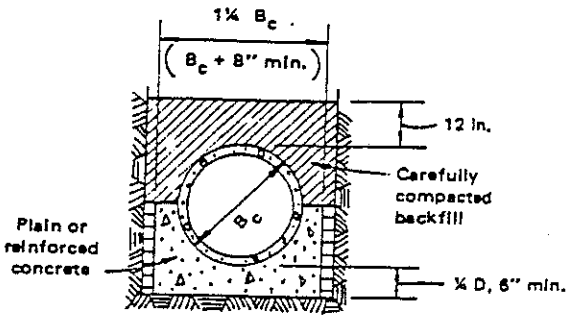

Concrete cradle

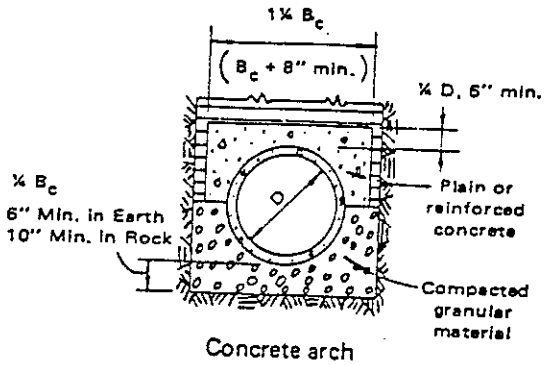

Concrete arch

CLASS A

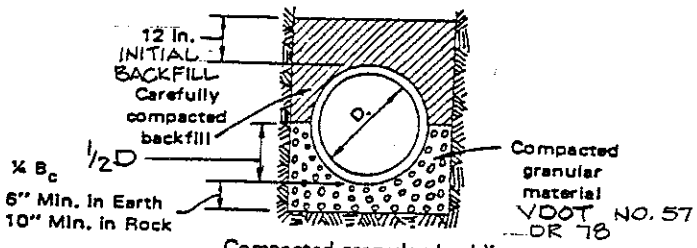

Compacted granular bedding, load factor 1.9

CLASS B

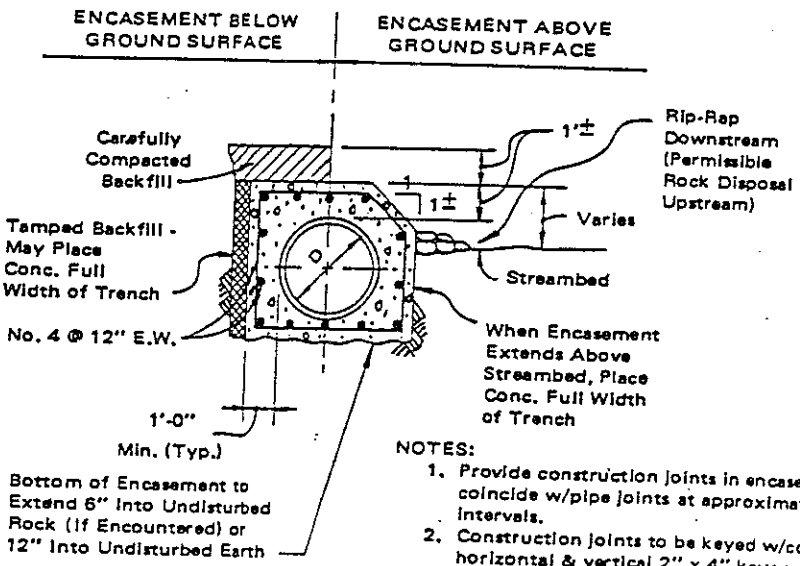

NOTES:

1. Provide construction joints in encasement to coincide w/pipe joints at approximately 32' intervals.
2. Construction joints to be keyed w/continuous horizontal & vertical 2" x 4" keys around conduit.
3. Construction joints shall have a separation area of at least 75% of total encasement cross section.
4. Discontinue longitudinal reinforcement at construction joints.
5. Begin & End Encasement at Pipe Joint.

CLASS C - STREAM CROSSING

PIPE BEDDING AND ENCASEMENT AT STREAM CROSSINGS

PLATE II-T

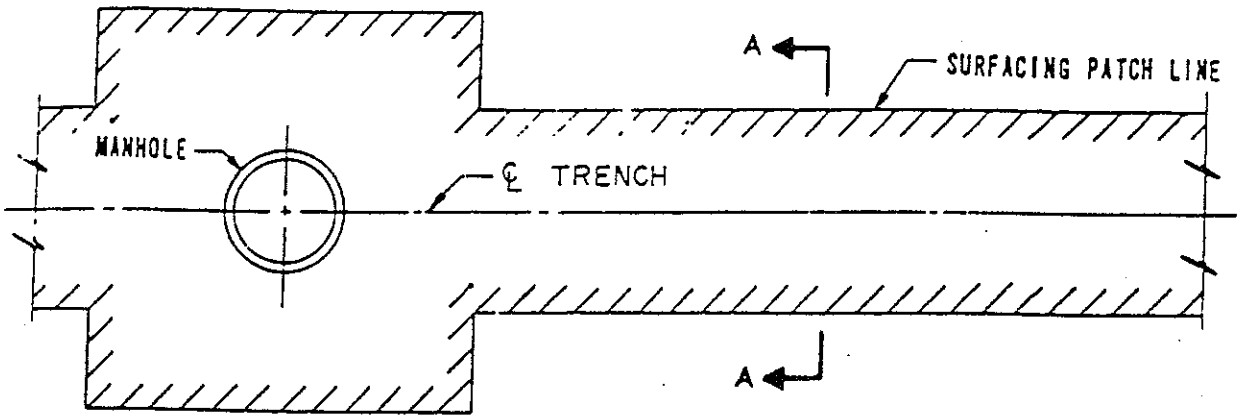

PLAN

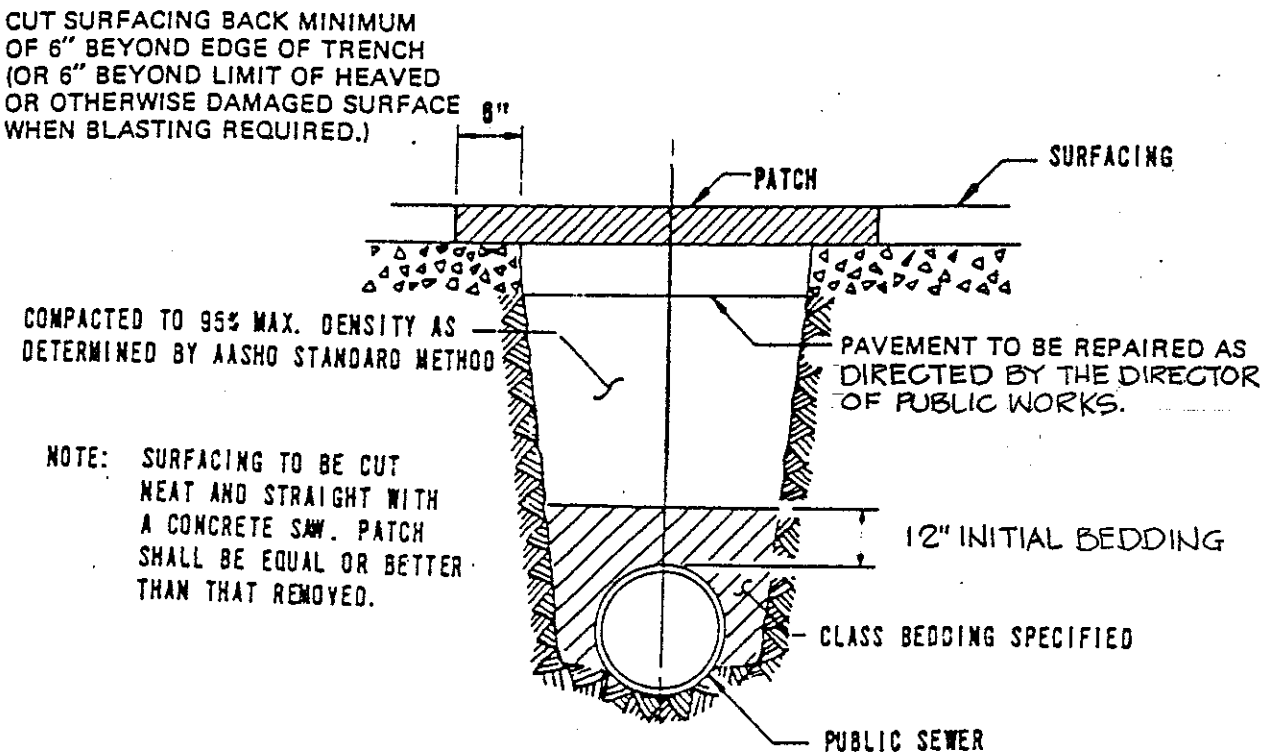

SECTION A-A

PAVEMENT PATCHING DETAIL